Flow sensor

DMIK

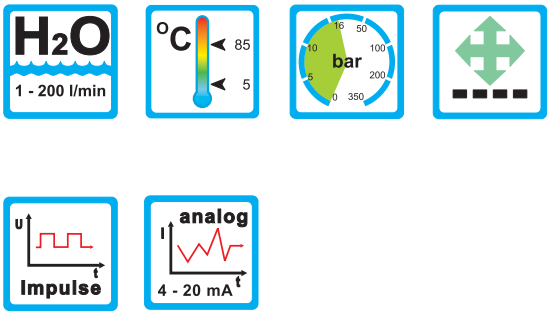

Range of Application

Measuring principle

- magnetic-inductive

Application

- Cooling systems and cooling circuits
- Mechanical engineering
- Chemical industry
- Research and Development

Features

- No moving parts
- No mechanical wear
- No additional pressure loss
- Fast response (< 500 ms)
- Maintenance free

Mounting instructions

- The operating instructions for DMIK must be observed!
- Download: www.meister-flow.com

Operating Data

Type	DMIK-7	DMIK-10	DMIK-20
Nominal pressure		PN 16	
Media temperature		5...85 °C	
Ambient temperature		5...70 °C	
Accuracy		±2 %	

Measuring ranges

Type	
DMIK-7	1...20 l/min
DMIK-10	2...40 l/min
DMIK-20	10...200 l/min

DMIK 1 0002 12-10 E M

Technical drawings, electrical connection and pressure loss

Technical drawing DMIK-7 and DMIK-10

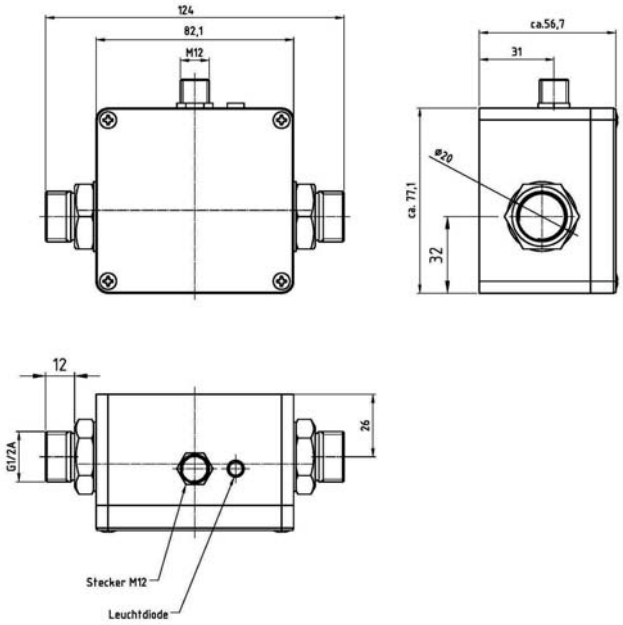

Technical drawing DMIK-20

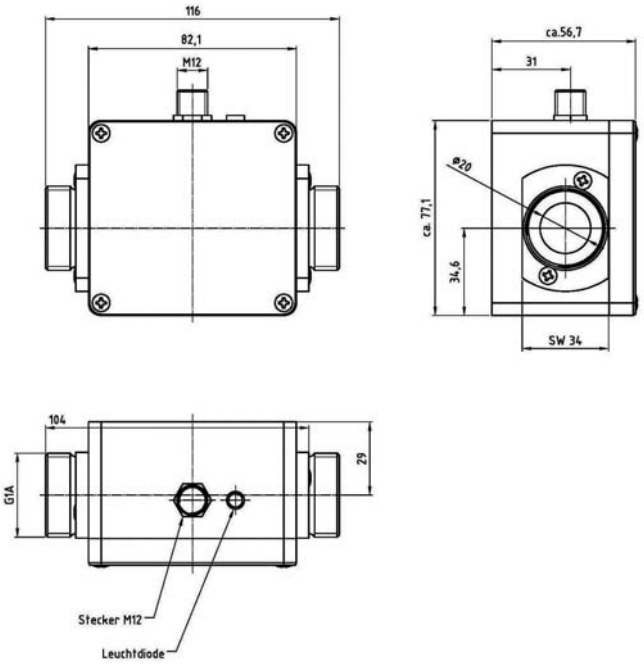

Electrical connection

Electrical connection

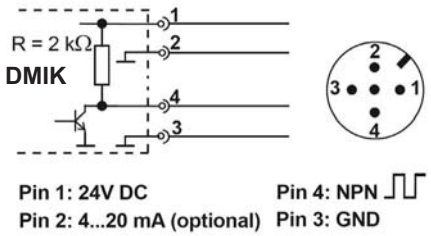

Electrical connection to a PLC

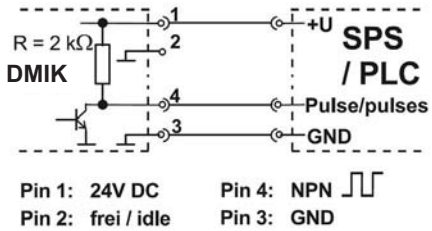

Pressure loss

DMIK-7 und DMIK-10

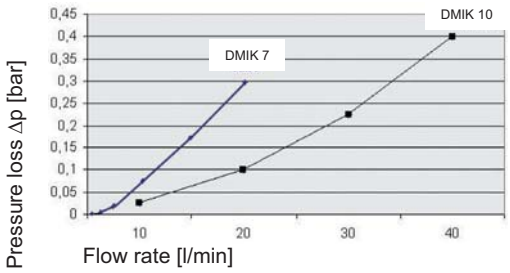

DMIK-20

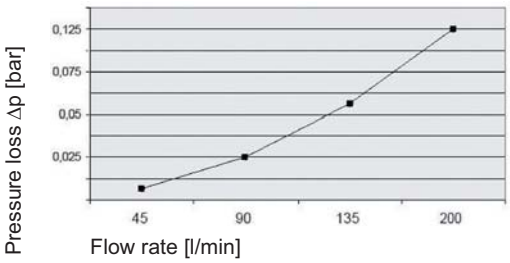

DMIK 2 0001 04-10 E M

The general business terms of Meister Strömungstechnik GmbH are valid • All rights reserved

Technical data, electrical data and materials

Technical Data

Type	DMIK-7	DMIK-10	DMIK-20
Measuring range:	1...20 l/min	2...40 l/min	10...200 l/min
Measuring accuracy:	±2 % of the measured value	±2 % of the measured value	±2 % of the measured value
Repeatability:	2 %	2 %	2 %
Signal activation start:	ca. 0,5 l/min	ca. 1 l/min	ca. 5 l/min
Medium	Water and other conductive fluids		
Minimum conductivity	50 µS / cm (lower conductivity influences measuring accuracy)		
Max. temperature:	5...85 °C		
Ambient temperature:	5...70 °C		
Nominal pressure:	PN 16		
Nominal width:	DN 7	DN 10	DN 20
Process connection:	G½-ISO 228 male thread	G½-ISO 228 male thread	G1-ISO 228 male thread
Flow indicator:	green LED, blinking proportional to flow through		

Electrical Data

Response time:	< 500 ms
Electrical connection:	Plug connector M 12x1
Supply voltage:	24 VDC ± 10 %
Current consumption:	max. 80 mA
Protective measures:	short-circuit proof (up to 30 V) polarity protected (up to -30 V)
Protection class:	IP 65

Materials

Electrodes:	1.4571
Procoess connctions:	1.4571
Measuring tube:	PEEK-GF30
Gaskets:	EPDM
Housing:	Cast aluminium

DMIK 3 0002 12-10 E M

The general business terms of Meister Strömungstechnik GmbH are valid • All rights reserved

Output signals

Output signals

Type	DMIK-7	DMIK-10	DMIK-20
Frequency output (standard)			
Puls rate[1]:			
Standard	855 pulses/l	855 pulses/l	200 pulses/l
Optional	1...2000 pulses/l Factory configurable	1...1000 pulses/l Factory configurable	1...200 pulses/l Factory configurable
Resolution:			
Standard	1,2 ml/pulse	1,2 ml/pulse	5 ml/pulse
Optional	1000...0,5 ml/pulse Factory configurable	Option: 1000...1 ml/pulse Factory configurable	Option: 1000...5 ml/pulse Factory configurable
Signal form:	Square wave signal NPN Internal pull-up resistor 2 kΩ Pulse-Duty ratio 50 : 50		
Signal current:	max. 20 mA current limited		
Analog output (optional)			
Signal:	4...20 mA corresponds 0...20 l/min[2]	4...20 mA corresponds 0...40 l/min[2]	4...20 mA corresponds 0...200 l/min[2]
Current limiting:	ca. 26 mA		
Max. load:	250 Ω to GND		

[1] Optional output signal of lower frequency, specifically for connection to digital PLC-ports.
[2] Others on request

Accessories

Power supply cord with injection molded coupling socket

M12x1, 4-pin version, shielded
Jacket material PUR (T_{max} = 80 °C),
UL approval

Length:

3 m
5 m
10 m

DMIK 4 0001 04-10 E M

TR Automatyka Sp. z o. o.
ul. Lechicka 14 ; 02-156 Warszawa
Tel. (+48 022) 886 10 16
Fax. (+48 022) 846 50 37
www.trautomatyka.pl
biuro@trautomatyka.pl